Automating Electric Power Consumption with a Smart Electricity Meter

A. N. Ushkov
National Research University "Moscow Power Engineering Institute" Moscow Polytechnic University
Moscow, Russia
UshkovAN@mpei.ru

V. V. Krutskikh
National Research University "Moscow Power Engineering Institute" Moscow Polytechnic University
Moscow, Russia
KrutskikhVV@mpei.ru

N. O. Strelkov
National Research University "Moscow Power Engineering Institute"
Moscow, Russia
StrelkovNO@mpei.ru

D. S. Chukashov
National Research University "Moscow Power Engineering Institute"
Moscow, Russia
ChukashovDS@mpei.ru

2024 International Russian Smart Industry Conference (SmartIndustryCon) | 979-8-3503-9504-4/24/$31.00 ©2024 IEEE | DOI: 10.1109/SMARTINDUSTRYCON61328.2024.10515825

***Abstract*—The development of radioelectronics in the 21st century is associated with the automation of human activities and the monitoring and measurement of production process parameters. Using wireless communication systems facilitates the remote monitoring of parameters and provides opportunities for real-time control. The efficiency of Internet of Things devices can be achieved through the rational distribution of loads, thus providing a design potential for energy-efficient smart city or smart house systems. The monitoring of power consumption is an important step toward the efficient usage of energy resources. It helps increase the operational reliability, environmental performance, and safety of electronic devices. This article discusses the usage of wireless and cloud technology for the optimization and monitoring of power consumption by smart house and smart city systems. The authors analyzed the key integration areas for the technical solution based on the Internet of Things concept. They developed a smart meter module and data processing algorithms that provide power consumption recommendations. The smart meter consists of a regular electricity meter and an extension module with a wireless connection. The data is processed with the SmartThings platform. The experimental data obtained on the laboratory setup showed the efficiency of the algorithms used and the efficiency of integrating the meter into the existing systems, as well as the economic feasibility of the solution.**

Keywords—Internet of Things, Smart Grid, wireless technology, Industrial Internet of Things, Smart House

I. Introduction

The active development of wireless communication systems provides new industrial opportunities in the utilization of Internet of Things devices for production process automation [1] and efficiency improvement [2]. Increasing the communication channel bandwidth and improving the reliability of the developed data transfer modules helps make industrial parameter control units and implement the present scenarios in real-time [3], as reflected in the Shannon proportion [4] (see Formula 1)

$$I = 3.32 \cdot Blog\left(1 + \frac{S}{N}\right), \quad (1)$$

where S is the signal energy at the wireless probe input; N is the noise energy at the wireless probe input; B is the communication channel bandwidth.

The automated data collection from the probe and cloud data processing help reduce the requirements for the hardware of wireless Internet of Things devices [5]. These trends expand the application areas and integration prospects of the developed data collection and remote control systems [6].

The suggested technical solutions [7] are being integrated with the Internet of Things systems and the Industry 4.0 concept that require partial or complete exclusion of the human from the system's operations [8].

The problem of energy-saving and sustainable energy consumption is very relevant nowadays due to the significant pollution of the environment by electricity generation processes. The use of renewable energy sources and the recycling of decommissioned sources is an important component of environmental problem solutions [9]. However, identifying and implementing an efficient solution requires controlling electricity consumption, processing data to minimize damage to the environment, and reducing costs.

In most cases, economic losses are associated with the incorrect loading of systems causing accidents and even greater financial and time inputs. Thus, modern Internet of Things systems are specifically tasked with data collection and decision-making in real-time [10].

Note that the architecture of the Internet of Things systems allows for the accumulation and processing of large data sets. The processing algorithms generate recommendations for the optimization of the system operations and provide an opportunity to create a digital twin for the analysis of various processes [11]. For instance, using an electric grid twin, we can assess its reliability and resilience against overloads and impulse processes [12].

On the other hand, processing data with artificial intelligence facilitates the development of an optimal operation algorithm based on a given criterion or quality indicator [13]. Using systems with cloud data processing with artificial intelligence algorithms provides an opportunity to design

979-8-3503-9504-4/24/$31.00 ©2024 IEEE

Authorized licensed use limited to: VTU Consortium. Downloaded on March 26,2026 at 15:28:13 UTC from IEEE Xplore. Restrictions apply.

resilient automation systems that would adjust themselves to the operating conditions [14].

Thus, a universal remote electric power monitoring module is a solution to a wide range of tasks that shall be reviewed separately. The suggested solution should also be compared to the existing ones.

II. The Integration Areas of a Smart Electricity Meter

Today, the problem of energy generation and consumption is crucial for both countries and ordinary people's lives. Figure 1 shows the reduction in electricity consumption by different countries [15] associated with the use of automation to control and optimize electric power costs.

The suggested methods and devices helped achieve a significant breakthrough in the energy efficiency of production processes. However, further development and optimization require innovative technologies, like remote monitoring and cloud data processing with artificial intelligence algorithms. These trends are closely related to the concept of the Internet of Things and wireless technologies that facilitate the solution of innovative problems.

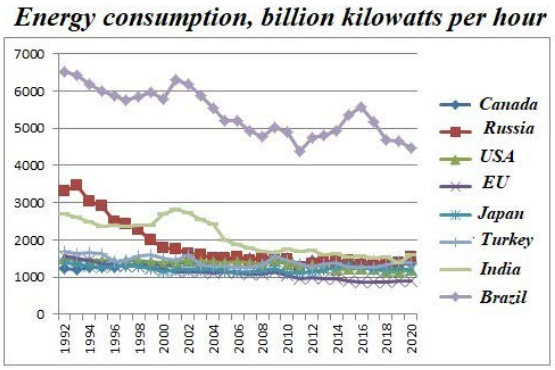

Fig. 1. Global electric power consumption.

Note that the analysis of [15] showed that the key areas of electricity consumption include the industrial and energy sectors that are closely related to the power consumption of complex engineering systems like big cities and megalopolises. Thus, it is feasible to check the adequacy of using the wireless smart meter [6].

A. Industrial Internet of Things

Industries make up an important sector of a country's economy, and its development is closely related to the introduction of advanced technology and digital solutions [16]. The key advantages of the Industrial Internet of Things include the reduction of power consumption costs through the efficient operation algorithms for microprocessor devices and increased operational reliability of systems. It is possible to improve the stability of production processes with monitoring systems for key parameters and situational control using cloud solutions [17]. The monitoring and automated control of grid voltage and loading values are among the solutions that can improve the stability of production complex operations.

The technical solution to this problem is using smart meters that can assess the grid condition and prevent damaging the expensive equipment [18]. In this case, such devices can be used at different production line sections to compensate for the occurring power supply instability using the feedback of the electricity meter module.

With remote data processing based on the Internet of Things architecture, we can optimize the operating times of specific production operations and simultaneously improve the reliability of the system [19].

Note that the production process optimization and security improvement with automated meters are already being implemented [20]. The key feature of the suggested technical solution is the potential data collection on the operation of a specific grid and the provision of recommendations and equipment operation schedules. Post-processing and remote control are among the new stage in system operation optimizations that increases its operational autonomy. Note that the efficiency of the suggested solution only makes sense if the developed IoT module can be integrated with the existing system.

B. Smart city systems

Large cities and megalopolises are complex engineering systems that actively utilize innovations in electronics, technology, and wireless communication systems [22]. The wide variety of functions and development areas provide several power supply grid requirements [23]. The key ones include, among other things, providing the continuous power supply to the entire system.

The solution to this problem can be based on the smart city concept where different systems interact and compensate for one another. This is achieved through the remote monitoring and control of various parameters using wireless devices. The wireless probes that are connected using network technology and make up a single data collection system, use energy-saving algorithms and data transfer protocols with minimum power inputs. The transfer of data to a server allows for the processing of large information flows in real-time and make respective decisions to stabilize the situation.

Based on the application specifics, the developed electricity meter shall feature a wide range of functions and be suited for the integration into a network to be used for solving a wide range of problems.

Currently, the mesh-type network shown in Figure 2 c is the most promising structure for device integration in a single system. It has the maximum protection because the devices transfer data not only to the central switching module with the server but also among each other. Thus, if one of the modules fails, the information can be transferred to the server from another module in the network.

However, this configuration of wireless devices is relatively complex and expensive, which limits its integration in real systems. Therefore, simpler device connection types are used in practice, e.g. star and tree networks (see Figure 2 a and b).

Authorized licensed use limited to: VTU Consortium. Downloaded on March 26,2026 at 15:28:13 UTC from IEEE Xplore. Restrictions apply.

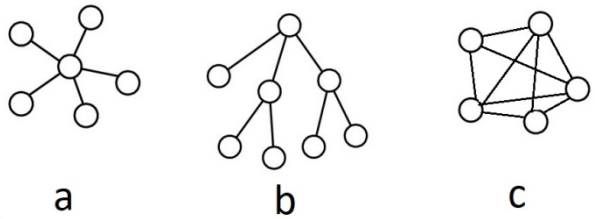

Fig. 2. Network topology: a - star, b - tree, c - mesh.

C. Smart house and utility systems

The problem of controlling the load and voltage in a detached house or a flat is a specific case of the power grid data collection problem [21]. Following the smart house concept, the data collection and processing algorithms must provide the user with recommendations on reducing the power loads in the grid to improve its reliability and ensure the economic efficiency of power consumption.

In most cases, the existing solutions include complete modules with microcontroller blocks built into the data collection system as one assembly. This solution is too expensive for mass deployment, thus, the developed module shall be not the electricity meter proper but an Internet of Things module that collects the data from the existing device that is already connected to the power supply system.

The suggested wireless communication module must comply with the data protection goals and be able to communicate with the utility services.

Based on the user's power consumption and utility service tariffs, we can even out the power grid loads and minimize the user's economic inputs.

Thus, the proposed system can optimize not only the grid load through the proper usage of devices but it can also improve the reliability of the system through the processing of the accumulated data and emergency scenario training based on the digital twins of systems.

III. Research Objective

The analysis of the potential application areas of smart electricity meters, the development of load control and management systems, as well as stability monitoring, make up a relevant problem. The mass integration and significant results require the wireless module to comply with the harmonization and versatility requirements. We suggest achieving this not through the development of an electricity meter proper but through the development of an extension module that can send data to a server for subsequent processing and generation of recommendations. The purpose of this research work is to design a wireless module for electricity meters and power consumption automation. Special attention was paid to data collection interfaces.

IV. The Wireless Module of a Smart Electricity Meter

Following the development criteria for a smart electricity meter, we decided to simplify the system as much as possible and develop algorithms to ensure the reduction of economic inputs and, as a result, the peak electric grid loads.

A. Device structure

Figure 3 shows the structure of the designed module where the data is transferred from a regular electricity meter that acts as a peripheral device connected to a wired communications interface.

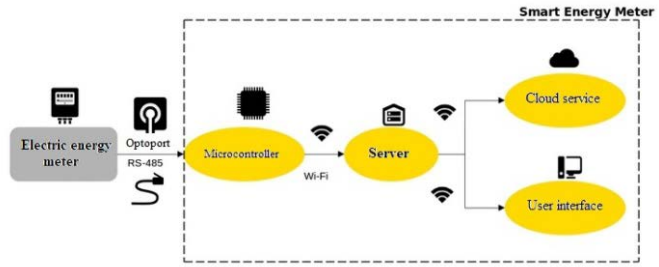

Fig. 3. The flow chart for a wireless electricity meter.

The obtained data is processed by the microcontroller, encrypted, and sent to a cloud service via a Wi-Fi connection. After the processing, the data is sent to the mobile user application that shows the real-time power consumption, and to the cloud storage database for a more detailed analysis and the optimization of the user's expenses.

B. Data transfer interface

Selecting the interface and data transfer protocol to solve the problem set is an important stage of device design. It requires taking into account the standard interfaces on electricity meters that act as peripheral devices like probes and actuators in our project.

This paper suggests using the RS-485 and optical port to collect electric power consumption data, as well as monitor and auto-adjust power grid loads. These interfaces are the most popular ones for connecting electricity meters to other devices in practice.

Figure 4 shows the meter connection with the RS-485 interface. Note that this interface is stable and resilient against common-mode interference due to the identification rules for logic zero and one .

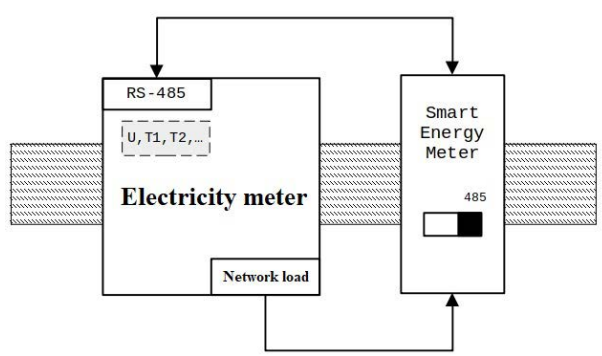

Fig. 4. The meter connection with the RS-485 interface.

Authorized licensed use limited to: VTU Consortium. Downloaded on March 26,2026 at 15:28:13 UTC from IEEE Xplore. Restrictions apply.

Also note that the RS-485 interface can connect up to 256 devices, which expands the potential capacities of the extension module developed for the smart electricity meter. Consider that connecting several devices to the same bus may cause asynchronous data transfer resulting in a short-circuit and input circuit burnout. Thus, it is feasible to use standard protection circuits based on transistors and resistors. In this case, the short circuit current will be limited by the output characteristic of the transistor in the saturation mode.

Special attention shall be paid to temperature stability that allows for the usage of a plastic casing for this project's goals.

Meter data can also be transferred to the extension module over the optical port. Figure 5 shows the standard connection of the device using the optical port comprising an optical receiver and an optical transmitter. Devices with this interface are also mass-produced and require a dedicated connection to the designed extension module.

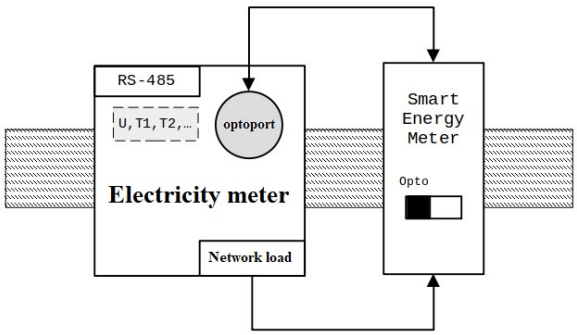

Fig. 5. Data transfer over the optical communications channel.

Thus, we formulated the concept and device structure to select the key electronic components and microprocessors. The data transfer over a wireless interface at a frequency of 2.4 GHz over Wi-Fi and data processing used an ESP-32-based microcontroller as an economically feasible solution . This module has a built-in receiver and transmitter, which simplifies the device development and production and allows for the reduction of dimensions of the proposed wireless communications module.

Figure 6 shows a basic circuit diagram of the device. It is used for the local indication of module operating modes using three LEDs and interacts with other devices over RS-485 or the optical port.

The system can be switched using a toggle actuator.

Another important goal is developing the electronic device casing and attaching it next to the meter. To achieve this, we suggest using a housing that can be installed on a DIN rail.

C. Laboratory setup experiment

The suggested solution was implemented on two experimental setups that included the following:

- The input breaker for safe electricity meter switching on and off;
- The electricity meter that collects the power grid state and electricity consumption data;
- The wireless extension module of the electricity meter that protects the grid from overloading, collects the power consumption data and sends them to a cloud service;
- The power socket used for load connection (a heater in the experiment).

Figures 7 and 8 show the models of the developed laboratory setups with an intermediate protective breaker in case of short circuits in the load line.

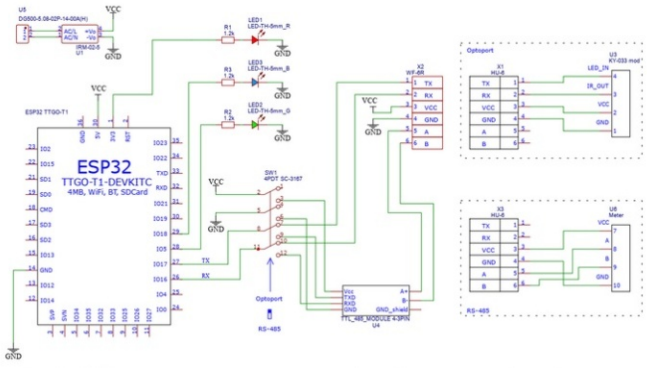

Fig. 6. The basic circuit diagram for the wireless module of the smart electricity meter.

Fig. 7. The model of a wireless meter with the RS-485 communications interface.

Fig. 8. The model of a wireless meter with the optical communications channel.

Thus, the IoT system can provide the current, voltage, and consumed power values in real-time. It also allows for the construction of dependency graphs for these measured values

Authorized licensed use limited to: VTU Consortium. Downloaded on March 26,2026 at 15:28:13 UTC from IEEE Xplore. Restrictions apply.

and time with subsequent analysis of power consumption history. This allows the cloud platform to suggest tariffs to a user based on the economic efficiency and power grid stability criteria.

Samsung SmartThings was used as a smart house platform. The data was sent to the platform over Wi-Fi and shown in the mobile application. When the meter readings differed from the standard ones, the user got a message.

Figure 9 shows the cloud data processing architecture of the SmartThings platform.

The selected platform is not a matter of principle. If necessary, the program can be easily converted into a web server or a MQTT server. We used SmartThings because this cloud platform is open and easily available. Besides, SmartThings has a documented API and examples that can simplify the development.

Without additional adjustments, the user will see the current readings of the electricity meter: the voltage, load power, and power consumption, as well as different tariffs and power consumption recommendations. In a separate section, the user can see the history of power consumption changes over a selected period limited to one year.

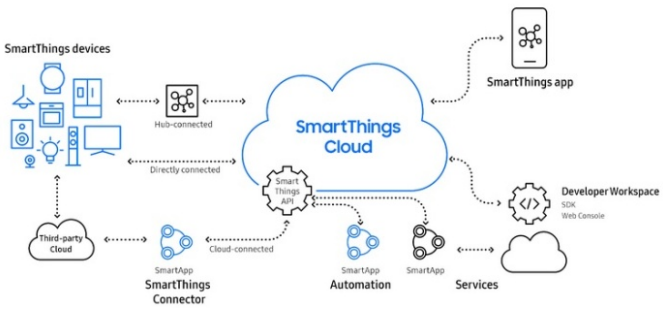

Fig. 9. The architecture of cloud data processing and electricity meter interactions.

The mobile application can also be used for the adjustment of scenarios related to the electricity meter. Figure 10 shows the following notifications and operating modes:

- **Night tariff** – notifies the user when the night tariff for electricity starts and stops to save money and/or optimize power consumption, e.g. by using the washing machine at night;
- **Day tariff** – notifies the user when the day tariff for electricity starts and stops to prevent paying more for electricity;
- **Out-of-house, limited consumption** – this mode is on when the user is not in the house and sends a notification when the set power consumption limit (500 W) is exceeded to prevent fire and improve safety.

Thus, the suggested solution transforms a standard electricity meter into a smart IoT system that can improve the reliability of the electric grid through sustainable power consumption and the safety of the building through timely notification about abnormal parameters. Using the available and inexpensive products makes this module a promising solution for the mass integration in various sectors including smart houses and the Industrial Internet of Things.

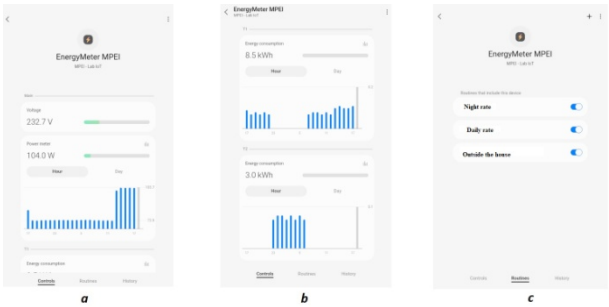

Fig. 10. The data display interface and operating mode settings in the mobile application.

V. Conclusion

Based on the results provided in this article, we can draw the following conclusions:

- We analyzed the key preconditions for the deployment of smart electricity monitoring and control systems for industrial and domestic use. The optimization of power consumption can improve the reliability of the operating electrical devices and provide an opportunity to reduce generation and environmental pollution.
- The proposed wireless Industrial IoT module supports the majority of electricity meters due to the popular data transfer interfaces: RS-485 and the optical communication channel. This significantly simplifies the integration of the module with the existing systems.
- The real-time data transfer via the SmartThings platform helps visualize the electricity meter data and provide recommendations for electricity usage by setting up specific modes that can limit the maximum power grid loads.
- Compared to the smart meters in development, our module is economically efficient because it only consists of a system that collects data and transfers them to the server, and sends the server's recommendations to the user application and the wireless module.
- Power grid load regulation with the meter can be expanded by collecting data from other household appliances to develop an algorithm for the utilization of various electrical devices with minimum costs and power grid loads.

References

[1] M. Wu, T.-J. Lu, F.-Y. Ling, J. Sun, and H.-Y. Du, "Research on the architecture of internet of things," in 2010 3rd international conference on advanced computer theory and engineering (ICACTE), 2010, vol. 5, pp. V5–484.

[2] V. Krutskikh, A. Ushkov, V. Flanden, and D. Blagodarov, "The internet of things system to prevent gantry crane collisions," in 2023 international ural conference on electrical power engineering (UralCon), 2023, pp. 763–768.

Authorized licensed use limited to: VTU Consortium. Downloaded on March 26,2026 at 15:28:13 UTC from IEEE Xplore. Restrictions apply.

[3] G. Kennedy, B. Davis, and S. Prasanna, Electronic Communication Systems, vol. 20. Tata McGraw-Hill Publishing Co. Ltd., New Delhi, 1985.

[4] W. Tomasi, Electronic Communication Systems. Litres, 2022.

[5] V. Krutskikh, K. Gajiyev, I. Putilova, and A. Ushkov, "Wireless degassing sensor for the industrial internet of things in heating systems," in 2023 International Ural Conference on Electrical Power Engineering (UralCon), 2023, pp. 769–774.

[6] M. Mikhailov and N. Strelkov, "Application of wi-fi and LoRa technologies for wireless measurement of physical quantities," 2019 International Youth Conference on Radio Electronics, Electrical and Power Engineering (REEPE)/Moscow, Russia," 2019.

[7] T. Jing, A. Maklakov, A. Radionov, V. Gasiyarov, and Y. Liang, "Formulations, solving algorithms, existing problems and future challenges of pre-programmed PWM techniques for high-power AFE converters: A comprehensive review," Energies, vol. 15, no. 5, p. 1696, 2022.

[8] A. Maklakov, A. Nikolaev, V. Gasiyarov, and A. Filimonova, "Power quality improvement in the grid via high-power AC regenerative electric drives," in 2023 International Russian Smart Industry Conference (SmartIndustryCon), 2023, pp. 352–355.

[9] R. Z. Sakiyama, E. S. J. Zukeram, L. B. Ruiz, and C. M. G. Andrade, "Development of a platform for monitoring the levels of dispersed oxygen in river components of a water supply micro basin using programmable microcontrollers," Water, vol. 15, no. 13, p. 2316, 2023.

[10] A. Ushkov, N. Strelkov, V. Krutskikh, and A. Chernikov, "Industrial internet of things platform for water resource monitoring," in 2023 International Russian Smart Industry Conference (SmartIndustryCon), 2023, pp. 593–599.

[11] Y. Jiang, S. Yin, K. Li, H. Luo, and O. Kaynak, "Industrial applications of digital twins," Philosophical Transactions of the Royal Society A, vol. 379, no. 2207, p. 20200360, 2021.

[12] P. Palensky, M. Cvetkovic, D. Gusain, and A. Joseph, "Digital twins and their use in future power systems," Digital Twin, vol. 1, p. 4, 2022.

[13] Z. Lu, P. Qian, D. Bi, Z. Ye, X. He, Y. Zhao, L. Su, S. Li, and Z. Zhu, "Application of AI and IoT in clinical medicine: Summary and challenges," Current Medical Science, vol. 41, pp. 1134–1150, 2021.

[14] S. G. Tzafestas, "Synergy of IoT and AI in modern society: The robotics and automation case," Robot. Autom. Eng. J, vol. 31, pp. 1–15, 2018.

[15] A. A. Radionov, V. R. Gasiyarov, A. S. Maklakov, and E. A. Maklakova, "Reactive power compensation in industrial grid via high-power adjustable speed drives with medium voltage 3L-NPC BTB converters," International Journal of Power Electronics and Drive Systems, t. 8, no. 4, 1455, 2017.

[16] E. Sisinni, A. Saifullah, S. Han, U. Jennehag, and M. Gidlund, "Industrial internet of things: Challenges, opportunities, and directions," IEEE Transactions on Industrial Informatics, vol. 14, no. 11, pp. 4724–4734, 2018.

[17] H. Boyes, B. Hallaq, J. Cunningham, and T. Watson, "The industrial internet of things (IIoT): An analysis framework," Computers in Industry, vol. 101, pp. 1–12, 2018.

[18] D. Zolin and E. Ryzhkova, "Digital twins for electric grids," in 2020 International Russian Automation Conference (RusAutoCon), 2020, pp. 175–180.

[19] A. Radionov, A. Maklakov, and V. Gasiyarov, "Smart grid for main electric drive of plate mill rolling stand," in 2014 International Conference on Mechanical Engineering, Automation and Control Systems (MEACS), 2014, pp. 1–4.

[20] V. Khramshin, A. Evdokimov, G. Kornilov, A. Radionov, and A. Karandaev, "System for speed mode control of the electric drives of the continuous train of the hot-rolling mill," in 2015 International Siberian Conference on Control and Communications (SIBCON), 2015, pp. 1–6.

[21] B. N. Silva, M. Khan, and K. Han, "Towards sustainable smart cities: A review of trends, architectures, components, and open challenges in smart cities," Sustainable Cities and Society, vol. 38, pp. 697–713, 2018.

[22] M. Batty, K. W. Axhausen, F. Giannotti, A. Pozdnoukhov, A. Bazzani, M. Wachowicz, G. Ouzounis, and Y. Portugali, "Smart cities of the future," The European Physical Journal Special Topics, vol. 214, pp. 481–518, 2012.

[23] T. Kumar and B. Dahiya, "Smart economy in smart cities," Smart Economy in Smart Cities, pp. 3–76, 2017.

Authorized licensed use limited to: VTU Consortium. Downloaded on March 26,2026 at 15:28:13 UTC from IEEE Xplore. Restrictions apply.